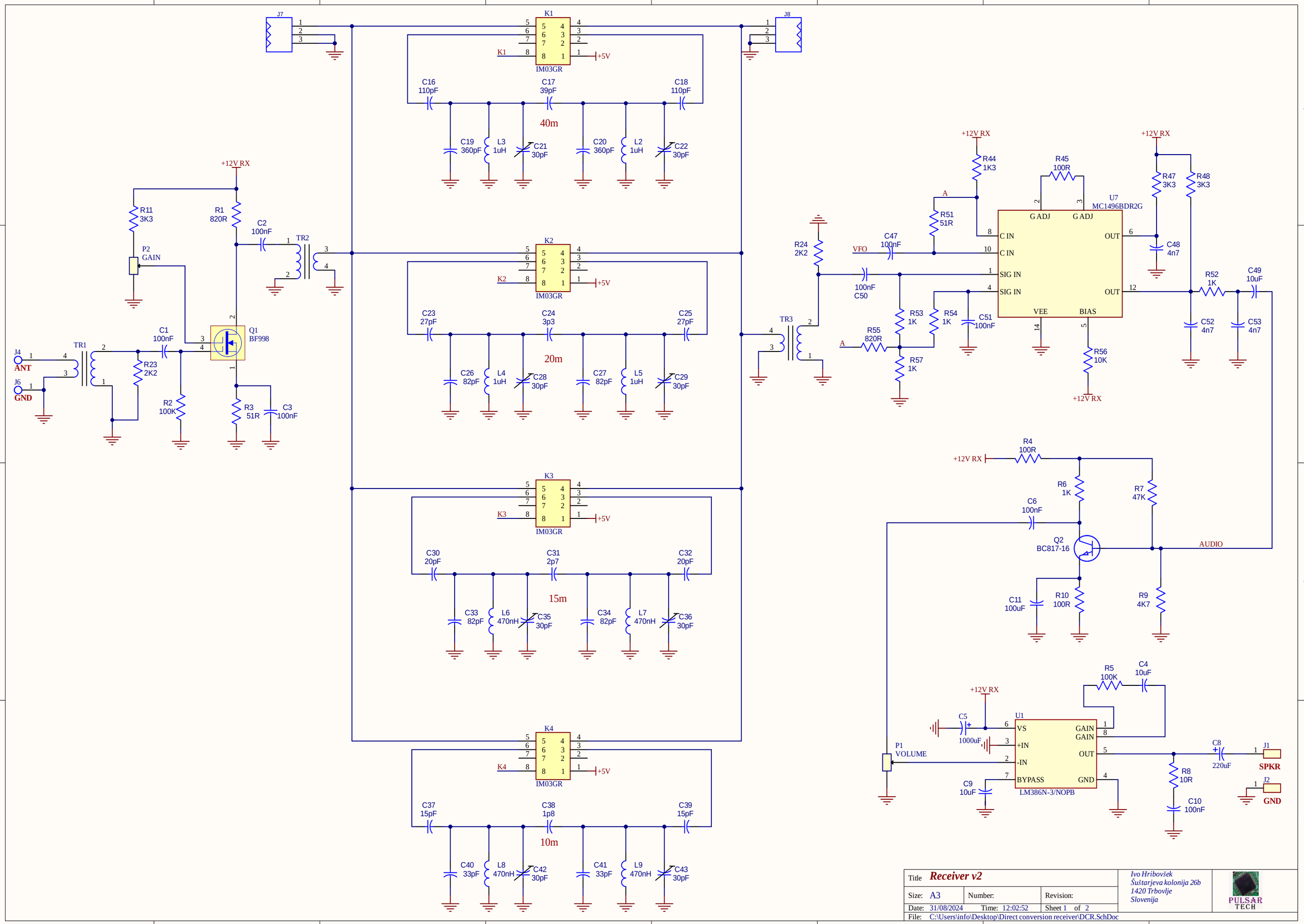

Title	*Receiver v2*		*Ivo Hribovšek* *Šuštarjeva kolonija 26b* *1420 Trbovlje* *Slovenija*
Size: A3	Number:	Revision:	PULSAR TECH
Date: 31/08/2024	Time: 12:02:52	Sheet 1 of 2	
File: C:\Users\info\Desktop\Direct conversion receiver\DCR.SchDoc			

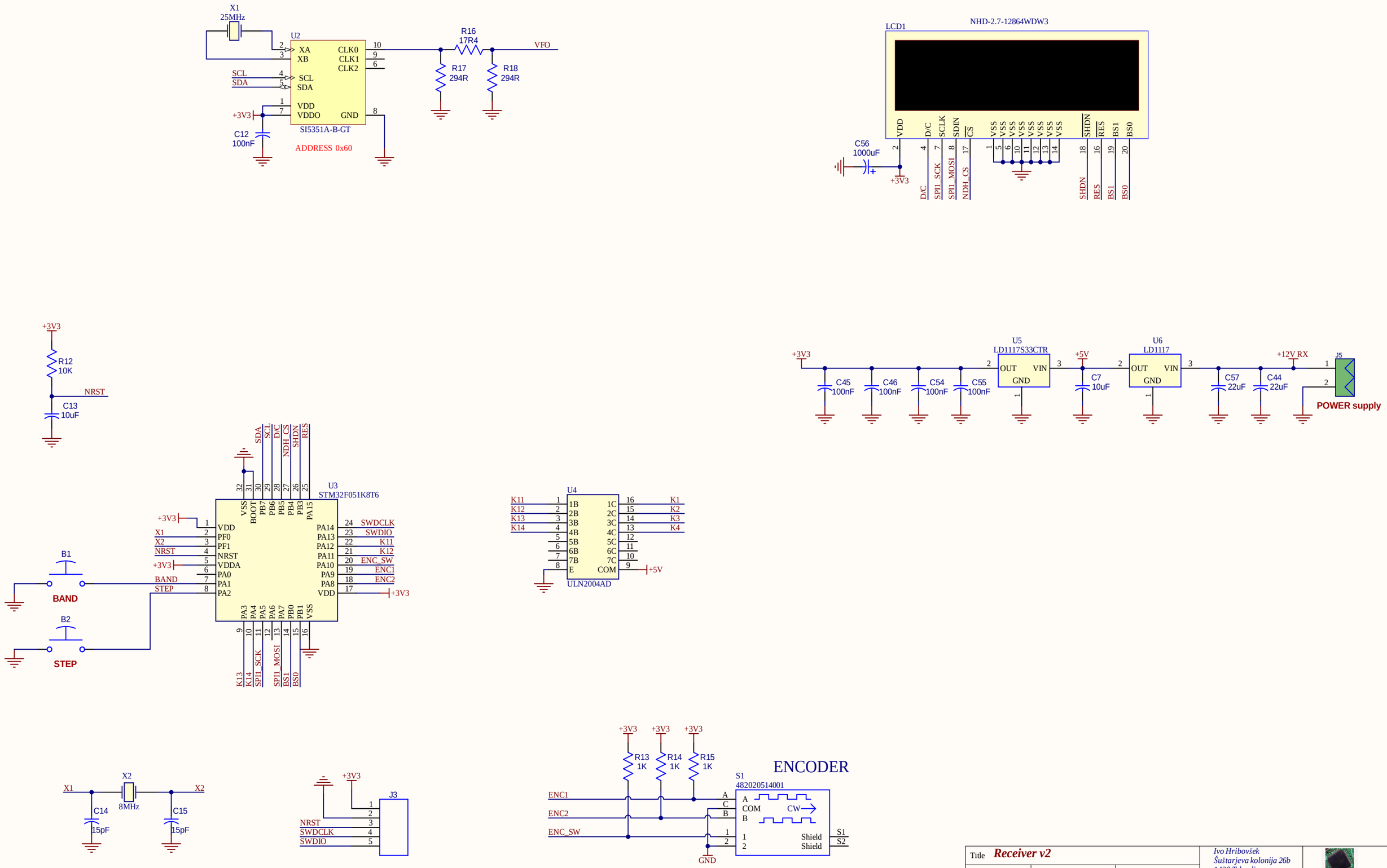

Title	*Receiver v2*		*Ivo Hribovšek* *Šuštarjeva kolonija 26b* *1420 Trbovlje* *Slovenija*
Size: A3	Number:	Revision:	PULSAR TECH
Date: 31/08/2024	Time: 12:02:52	Sheet 2 of 2	
File: C:\Users\info\Desktop\Direct conversion receiver\DCR v2.SchDoc			